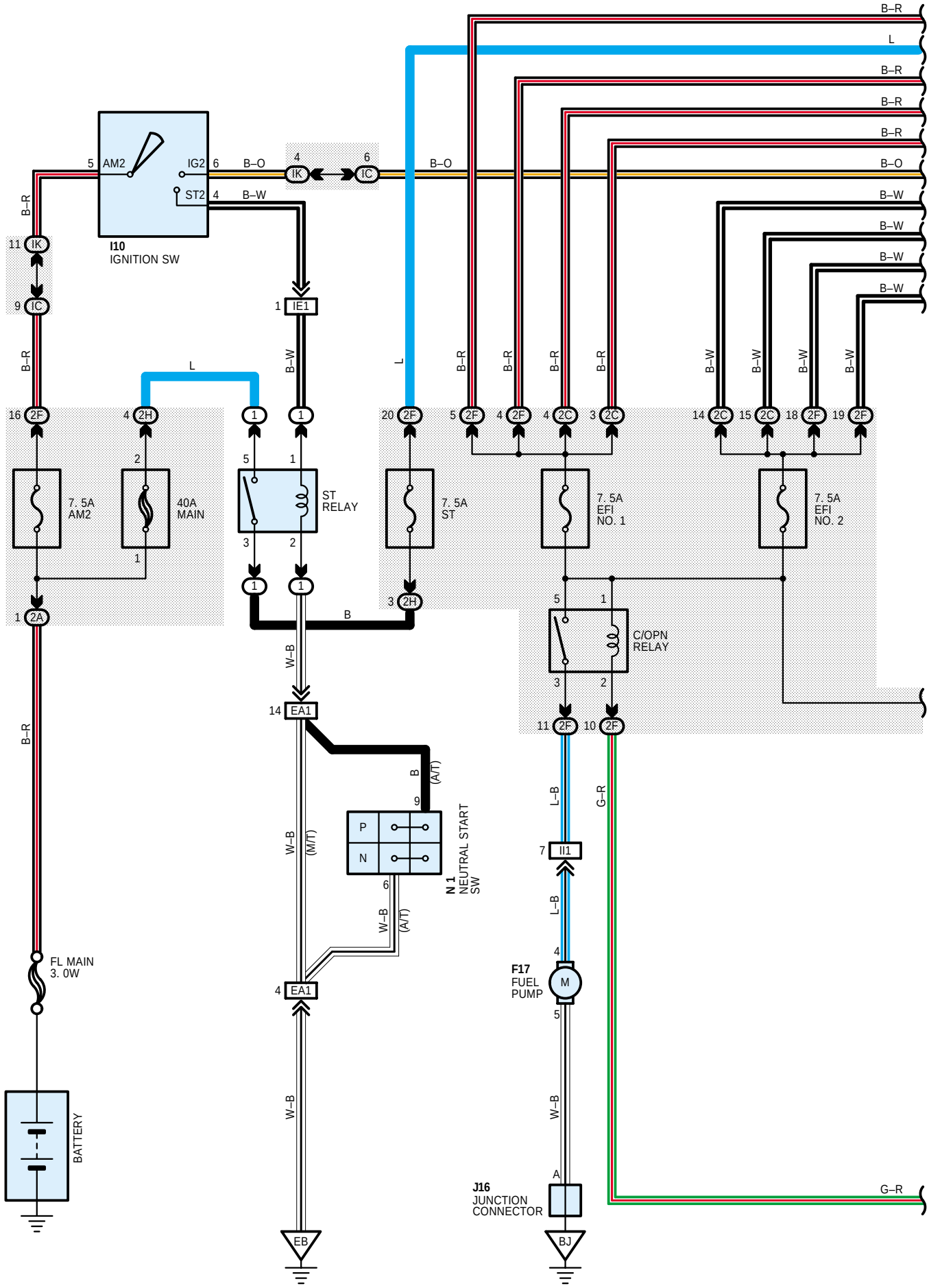
I10
IGNITION SW
AM2
IG2
ST2
IK
IC
IE1
EA1
II1
2F
2H
2A
2C
7. 5A
AM2
40A
MAIN
ST
RELAY
7. 5A
ST
7. 5A
EFI
NO. 1
7. 5A
EFI
NO. 2
C/OPN
RELAY
N 1
NEUTRAL START
SW
P
N
(A/T)
(M/T)
FL MAIN
3. 0W
BATTERY
F17
FUEL
PUMP
M
J16
JUNCTION
CONNECTOR
EB
BJ
B–R
L
B–O
B–W
W–B
L–B
G–R

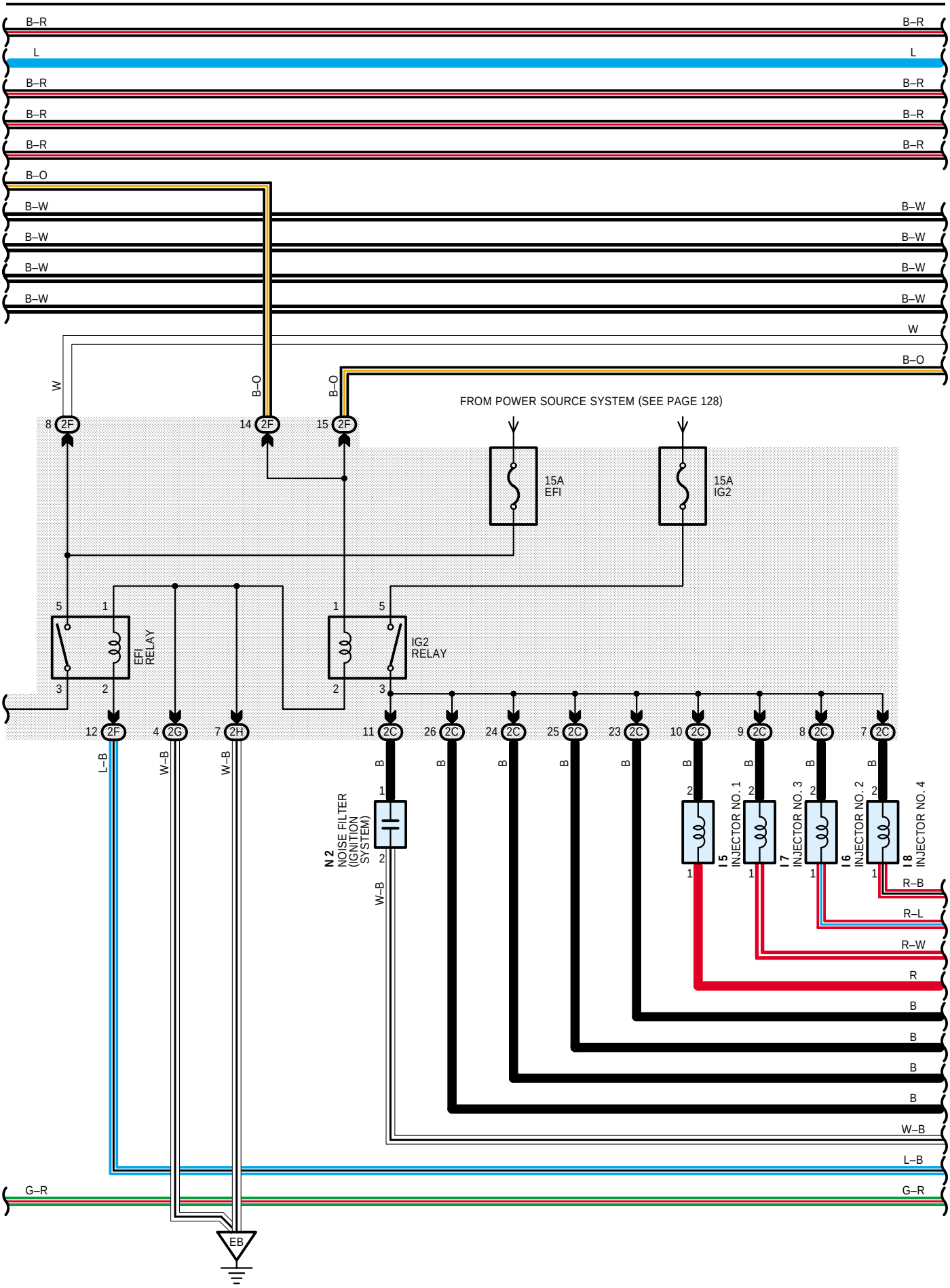
B–R
L
B–R
B–R
B–R
B–O
B–W
B–W
B–W
B–W
W
B–O
FROM POWER SOURCE SYSTEM (SEE PAGE 128)
8 2F
14 2F
15 2F
15A
EFI
15A
IG2
EFI
RELAY
IG2
RELAY
12 2F
4 2G
7 2H
11 2C
26 2C
24 2C
25 2C
23 2C
10 2C
9 2C
8 2C
7 2C
L–B
W–B
W–B
N 2
NOISE FILTER
(IGNITION
SYSTEM)
I 5
INJECTOR NO. 1
I 7
INJECTOR NO. 3
I 6
INJECTOR NO. 2
I 8
INJECTOR NO. 4
R–B
R–L
R–W
R
B
W–B
L–B
G–R
EB

ENGINE CONTROL AND ENGINE IMMOBILISER SYSTEM

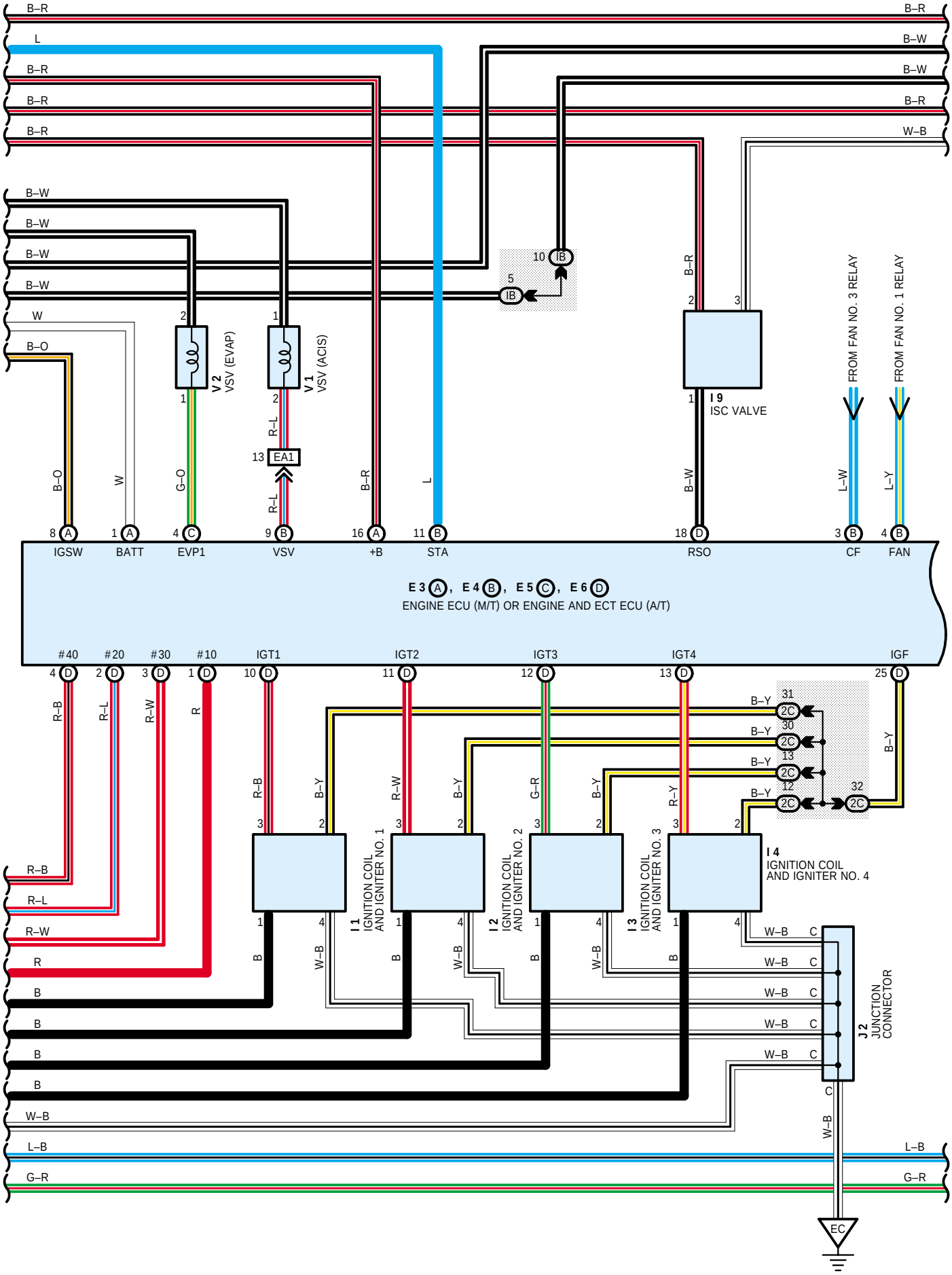

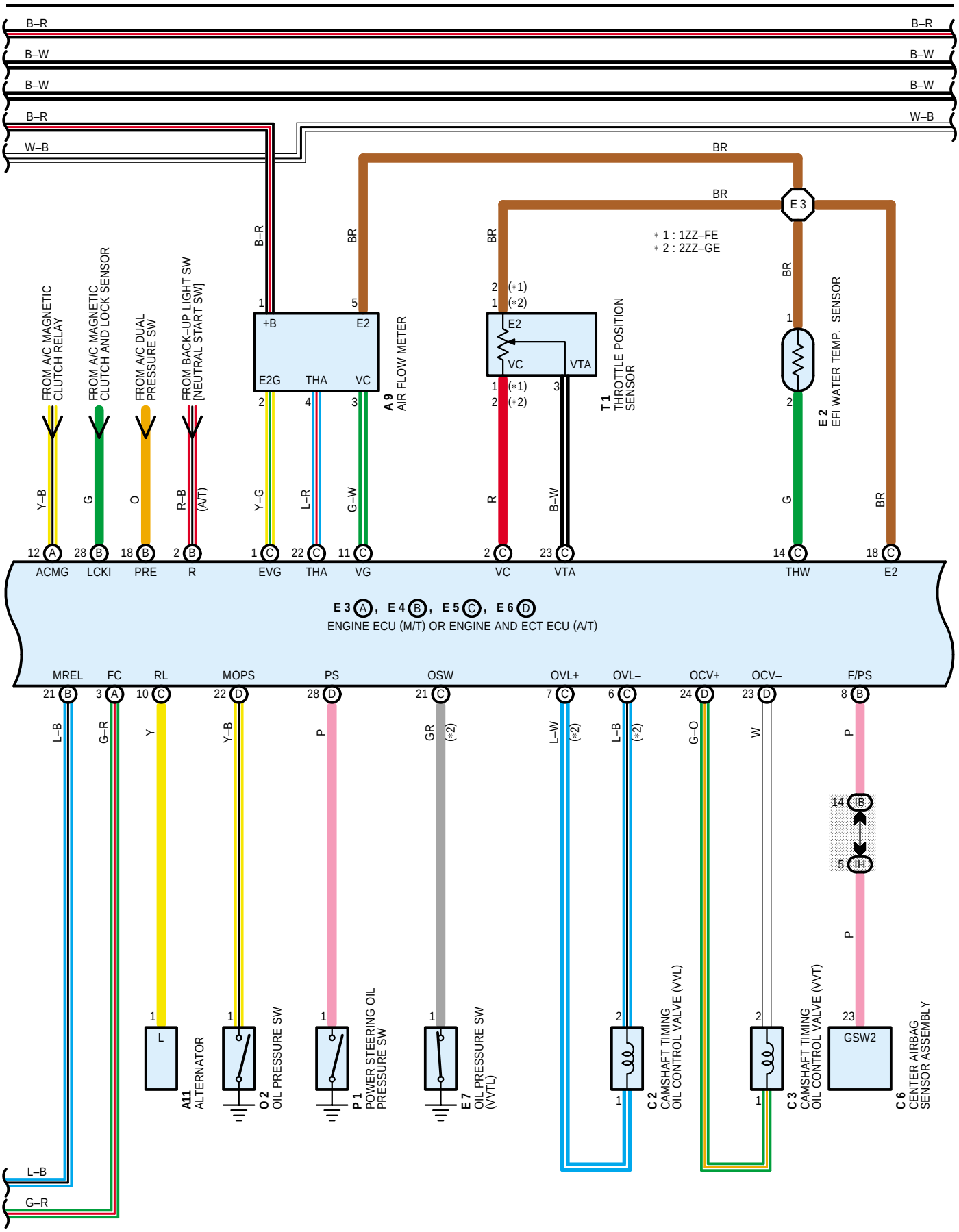
B–R
B–W
B–W
B–R
W–B
W–B
BR
BR
E 3
* 1 : 1ZZ–FE
* 2 : 2ZZ–GE
FROM A/C MAGNETIC CLUTCH RELAY
FROM A/C MAGNETIC CLUTCH AND LOCK SENSOR
FROM A/C DUAL PRESSURE SW
FROM BACK–UP LIGHT SW [NEUTRAL START SW]
+B
E2
E2G
THA
VC
A 9
AIR FLOW METER
E2
VC
VTA
T 1
THROTTLE POSITION SENSOR
E 2
EFI WATER TEMP. SENSOR
Y–B
G
O
R–B
(A/T)
Y–G
L–R
G–W
R
B–W
G
BR
12 A ACMG
28 B LCKI
18 B PRE
2 B R
1 C EVG
22 C THA
11 C VG
2 C VC
23 C VTA
14 C THW
18 C E2
E 3 A, E 4 B, E 5 C, E 6 D
ENGINE ECU (M/T) OR ENGINE AND ECT ECU (A/T)
MREL
FC
RL
MOPS
PS
OSW
OVL+
OVL–
OCV+
OCV–
F/PS
21 B
3 A
10 C
22 D
28 D
21 C
7 C
6 C
24 D
23 D
8 B
L–B
G–R
Y
Y–B
P
GR
(*2)
L–W
(*2)
L–B
(*2)
G–O
W
P
14 IB
5 IH
P
L
A11
ALTERNATOR
O 2
OIL PRESSURE SW
P 1
POWER STEERING OIL PRESSURE SW
E 7
OIL PRESSURE SW (VVTL)
C 2
CAMSHAFT TIMING OIL CONTROL VALVE (VVL)
C 3
CAMSHAFT TIMING OIL CONTROL VALVE (VVT)
GSW2
C 6
CENTER AIRBAG SENSOR ASSEMBLY
L–B
G–R

ENGINE CONTROL AND ENGINE IMMOBILISER SYSTEM

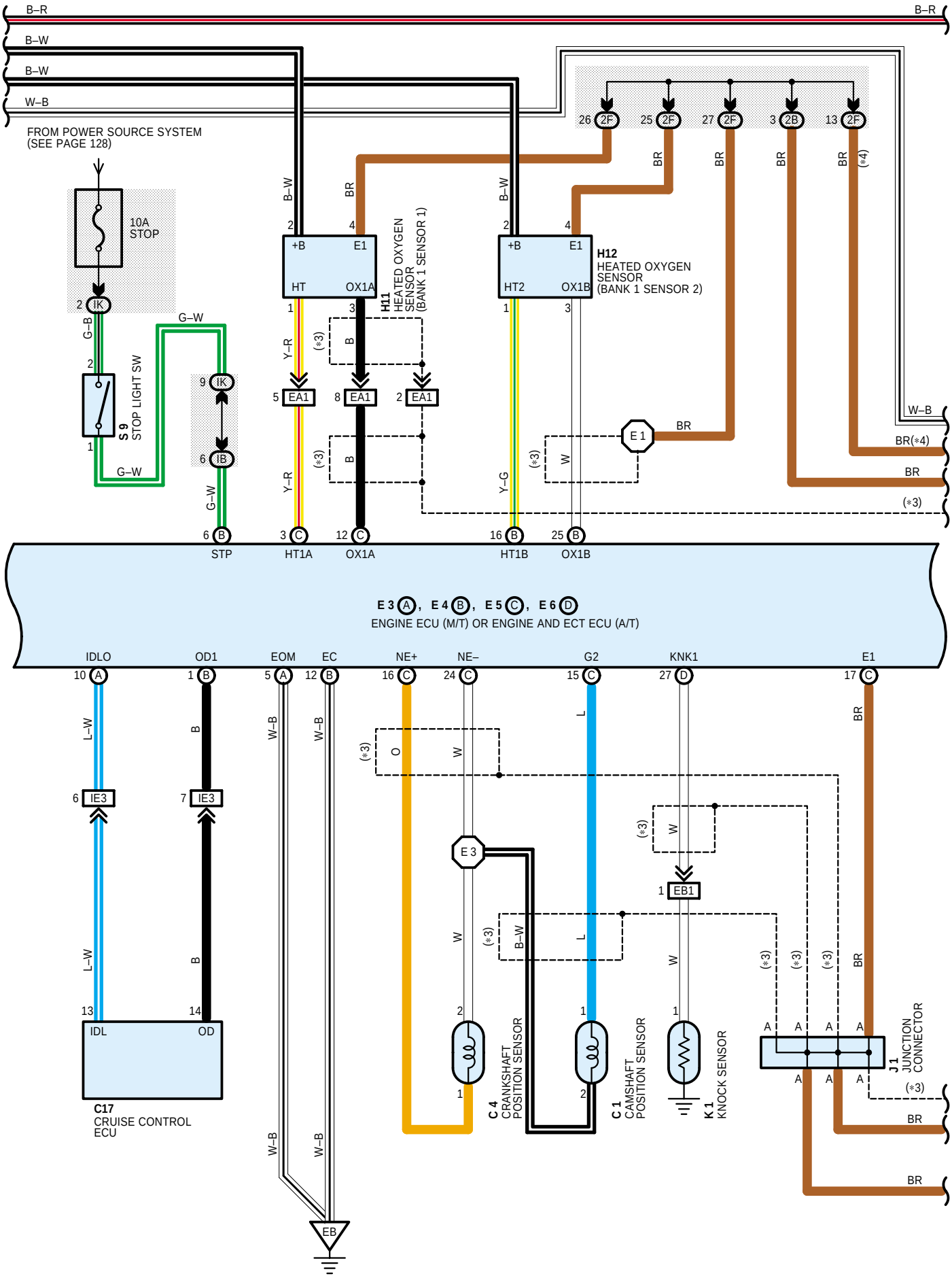

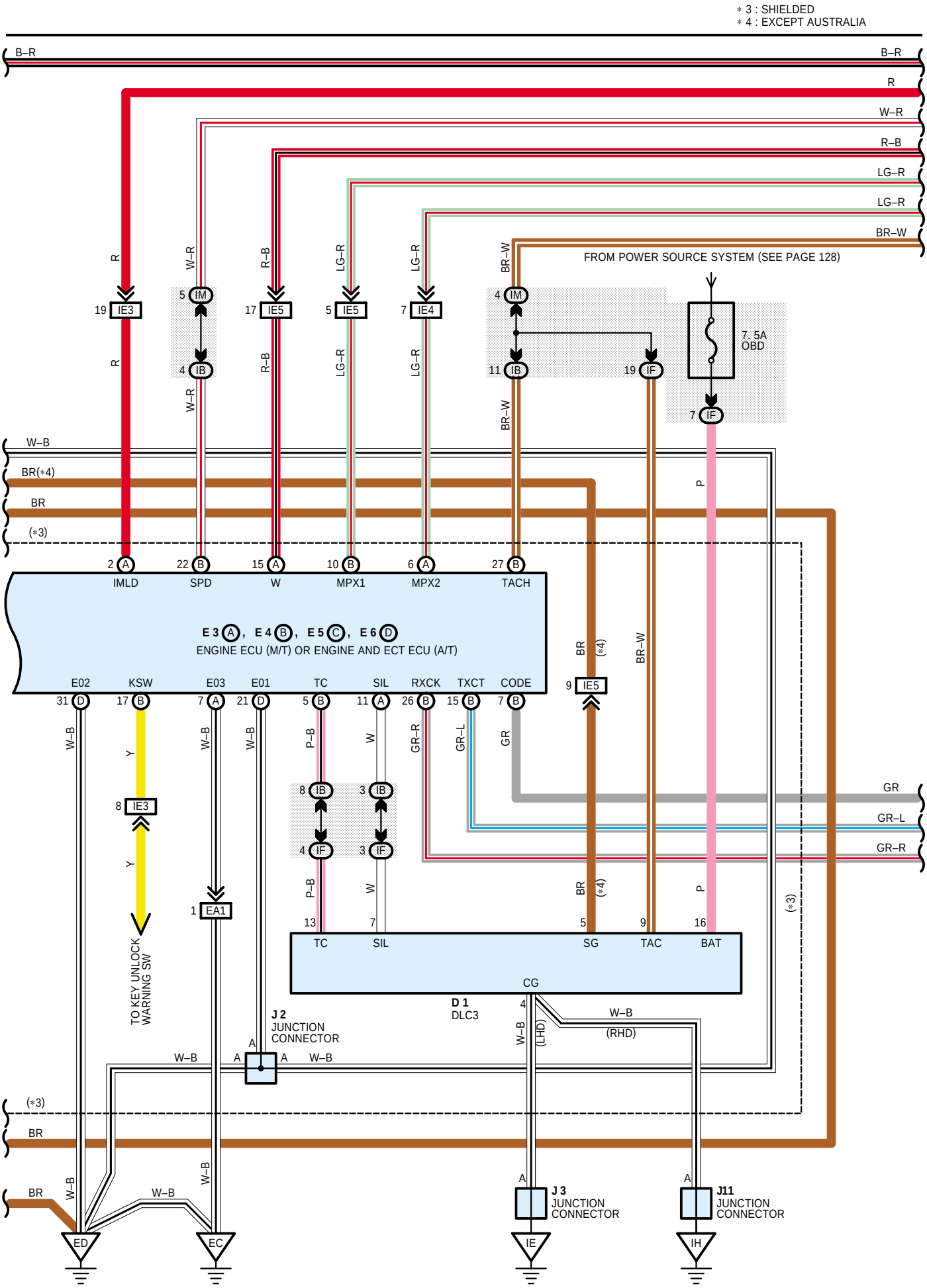

* 3 : SHIELDED
* 4 : EXCEPT AUSTRALIA
B–R
R
W–R
R–B
LG–R
BR–W
FROM POWER SOURCE SYSTEM (SEE PAGE 128)
7. 5A
OBD
IE3
IM
IB
IE5
IE4
IF
W–B
BR(*4)
BR
(*3)
IMLD
SPD
W
MPX1
MPX2
TACH
E 3 A, E 4 B, E 5 C, E 6 D
ENGINE ECU (M/T) OR ENGINE AND ECT ECU (A/T)
E02
KSW
E03
E01
TC
SIL
RXCK
TXCT
CODE
GR
GR–L
GR–R
EA1
TO KEY UNLOCK
WARNING SW
SG
TAC
BAT
CG
D 1
DLC3
J 2
JUNCTION
CONNECTOR
(LHD)
(RHD)
J 3
JUNCTION
CONNECTOR
J11
JUNCTION
CONNECTOR
ED
EC
IE
IH

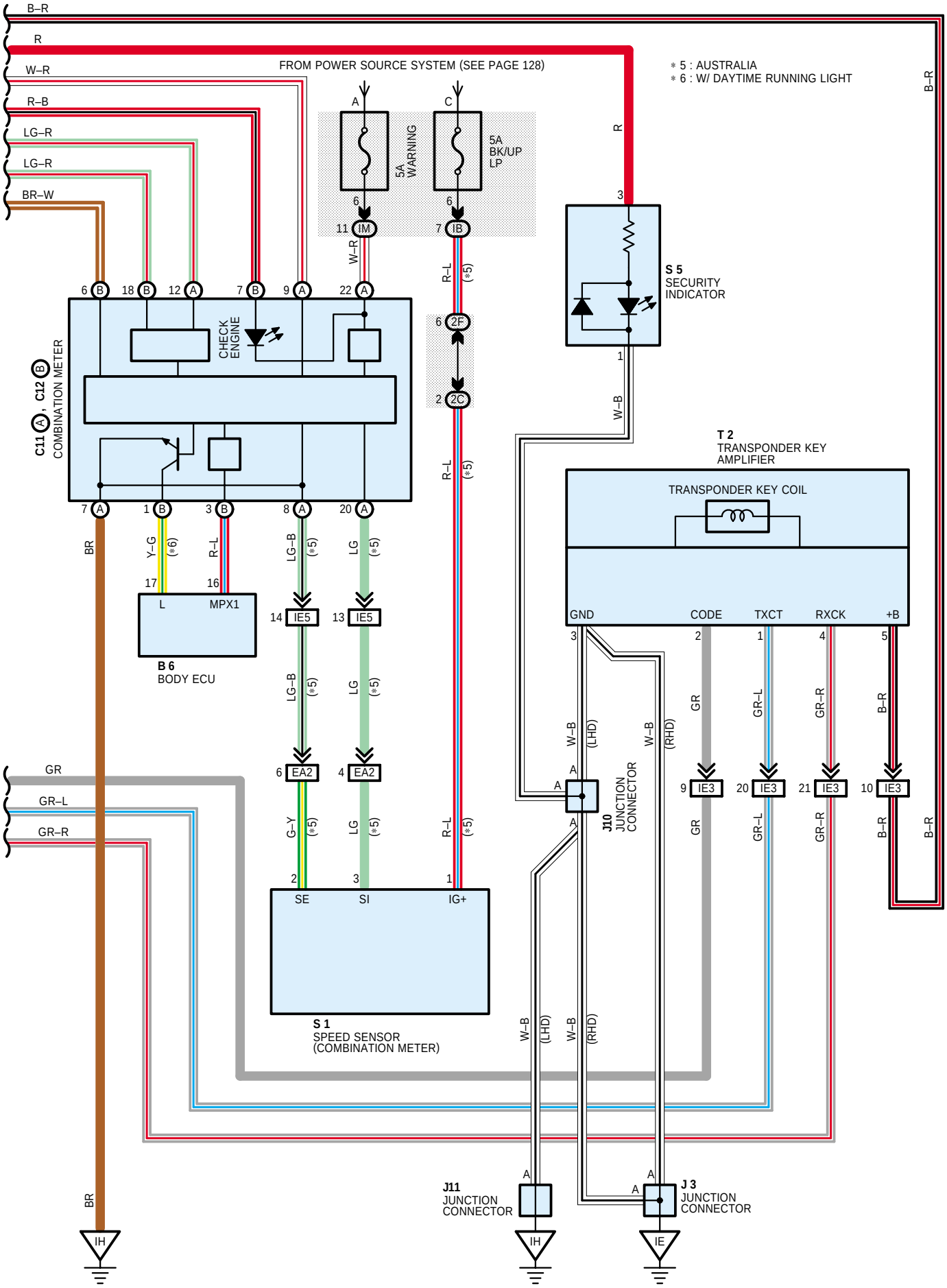
B–R
R
W–R
R–B
LG–R
LG–R
BR–W
FROM POWER SOURCE SYSTEM (SEE PAGE 128)
* 5 : AUSTRALIA
* 6 : W/ DAYTIME RUNNING LIGHT
5A WARNING
5A BK/UP LP
S 5
SECURITY INDICATOR
C11 A, C12 B
COMBINATION METER
CHECK ENGINE
B 6
BODY ECU
MPX1
T 2
TRANSPONDER KEY AMPLIFIER
TRANSPONDER KEY COIL
GND
CODE
TXCT
RXCK
+B
IE5
EA2
IE3
J10
JUNCTION CONNECTOR
S 1
SPEED SENSOR (COMBINATION METER)
SE
SI
IG+
J11
JUNCTION CONNECTOR
J 3
JUNCTION CONNECTOR
IH
IE
GR
GR–L
GR–R
BR
W–B
(LHD)
(RHD)